UniLyft™ PRICING GUIDE

Prices Effective November, 2021

MACHINES AND PARTS

UNILOCK®

Table of CONTENTS

UNILYFT MACHINES **3**
Model - L Narrow Track 3
Model - PM Wide Track 4
Model - P (Skid Steer Attachment) 4
Model - Mini (Compact Loader Attachment) ... 5
Dealer Work Station Jib Crane 5
SUCTION HEADS **6**
Single Head 6
Double Head 7
Triple Head 8
6/3 Head 9
Random Head Beacon Hill Platform 10
Thornbury Head 11
Artline Head 12
City Park/Hex Head 13
Eco-Priora Head 14
Westport Head 15
Promenade Head 16
Pisa2 XL / Concord XL Gripper 17
Siena Edge Head 18
PARTS PRICING **19**
Extension Tubes 19
90˚ Angle Adapter 20
Vacuum Pre Filters 20
Lifting Tube + Controller 21
Lifting Tube Complete 21
Lifting Tube Tube Only 22
Vacuum Hose 2″ Grey 22
Miscellaneous Parts 23

Custom Suction Heads:
Ask your local Unilock Territory Manager for details.

WARRANTY

UniLyft is manufactured by Pritec Vaculyft AB follow the CE regulations and are certified under ISO 9001, ISO 14001, EN 1090-1 and EN 3834-4.

The following warranty conditions are valid for machines and parts produced by Pritec Vaculyft AB Sweden for a period of 12 months from purchasing date:

- The warranty covers any defects in parts or workmanship under normal use during the warranty period.
- The warranty covers repair and replacement of the broken part on the unit.

The Warranty **does not** cover:

- The warranty does not cover wear and tear parts such as hoses, tubes, pads and belts.
- The warranty does not cover usage that contravenes the instructions provided in the Operator's Manual.

If warranty services require more work than can be done at your work site, it must be sent to a local small equipment workshop approved by Pritec and Unilock. No freight or travel costs will be charged to you.

Neither Pritec or Unilock will be held liable for lost time or related expenses due to down time.

UniLyft MACHINES

- All prices are in USD and are FOB any Unilock manufacturing location in USA or Canada. Custom heads are subject to additional freight unless shipped with machine.
- Delivery time: 7 to 10 business days for inventoried machines (Wappingers Falls, NY) or 8 to 10 weeks if shipped from Sweden. (Subject to availability).
- Unilock reserves the right to change pricing and/or specifications without notice.

Access tight or narrow areas.

MODEL - L
NARROW TRACK

PRODUCT SPECIFICATION	
Part Number	841100P
Track Chassis	HINOWA PT9 / Pritec L
Engine	Vanguard 400 14hp or Honda GX390 13hp Gasoline (Both are petrol engines)
Max Lift Capacity	140kg (310 lbs)
Working Diameter	6000mm (236")
Gross Weight	From 700kg (1540 lbs)
Max Speed	3.5 km/h (2.2 mph)
Dimensions	L = 2751mm (107") W = 1050mm (41") H (min) = 2100mm (83") (Folded) H (max) = 2635mm (104")

CALL UNILOCK FOR PRICING

Eliminate the need for a forklift on site.

MODEL - PM
WIDE TRACK

PRODUCT SPECIFICATION	
Part Number	841400P
Track Chassis	Hinowa TP2000 / Pritec PM
Engine	Vanguard 16.0 16hp petrol engines
Max Lift Capacity	140kg (310 lbs)
Working Diameter	6000mm (236")
Max Load - Forklift	1800kg (3527 lbs)
Gross Weight	1150kg (2535 lbs)
Max Speed	2.2 km/h (1.4 mph)
Dimensions	L = 2340mm (92") W = 1880mm (74") H (min) = 2100mm (83") (Folded) H (max) = 2625mm (103")

CALL UNILOCK FOR PRICING

Works with most skid steers or loaders.

MODEL - P
SKID STEER ATTACHMENT

PRODUCT SPECIFICATION	
Part Number	841300UH
Carrier	Skid Steer Not Included Forks Not included
Chassis	Pritec P
Engine	Carrier, PTO Connection Required
Max Lift Capacity	140kg (310 lbs)
Working Diameter	7000mm (275")
Gross Weight	From 400kg (881 lbs)
Dimensions	L = 1735mm (68") W = 1332mm (52") H (min) = 2030mm (80") (Folded) H (max) = 2560mm (101")

CALL UNILOCK FOR PRICING

Forks not included.
Skid steer loader not included. PTO Flow Rate Required = 22 Liters/Minute
**Minimum Loader Weight = 3,629 Kg (8,000 lbs).*
Loader must have a low center of gravity for safe operation.

NEW DESIGN
FOR COMPACT TRACK LOADERS
(PTO required)

MODEL - 'MINI'
COMPACT TRACK LOADER* ATTACHMENT

PRODUCT SPECIFICATION	
Part Number	842400H
Carrier	Skid Steer Required (Not Included)
Chassis	Pritec MiniP
Engine	Carrier, PTO Connection Required
Max Lift Capacity	140kg (310 lbs)
Working Diameter	5000mm (197")
Gross Weight	From 300kg (660 lbs)
Dimensions	L = 1740mm (69") W = 1150mm (45") H (min) = 1980mm (78") (Folded) H (max) = 2510mm (99")

CALL UNILOCK FOR PRICING

Compact Track Loader not included. Quick-attach mounting plate may require modification for your model.
PTO Flow Rate Required = 22 Liters/Minute
**Minimum Loader Weight = 1180 Kg (2,600 lbs). Loader must have a low center of gravity for safe operation.*

DEALER WORK STATION
JIB CRANE

PRODUCT SPECIFICATION	
Part Number	665000-SVK (JIB CRANE)
Length crane arm	3000mm (118") radius
Total length	3800mm (150")
Width	1200mm (47")
Height	3600mm (142")
Weight including concrete block	1400kg (3086 lbs)
Max lift capacity	140kg (310 lbs)
Power	Gas or Electric (Contact Unilock for details)

CALL UNILOCK FOR PRICING

Custom solutions are available upon request.

Suction HEADS

- All suction head prices are in USD and are FOB Wappingers Falls, NY (unless ordered with a UniLyft)
- 7 to 10 day delivery on heads depending on availability.
- Customized heads for Unilock products available. Contact your Territory Manager for details.
- Unilock reserves the right to change pricing and/or specifications without notice.

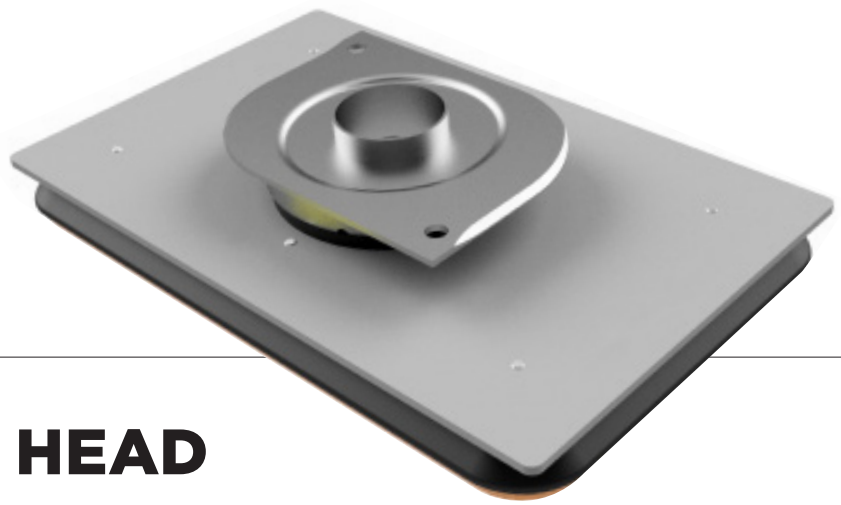

SINGLE HEAD

PRODUCT SPECIFICATION

PRODUCT NAME	PART NUMBER	PRICE USD
Complete Suction Head	841706	$519
Black Gasket & Sponge Assembled	860039	$119
Black Gasket (210mm x 330mm)	860039-01	$69
Orange Sponge (210mm x 330mm)	860039-02	$33

UNIT CAPABILITIES

12″ x 24″
14″ x 19″
18″ x 24″
24″ x 24″
(Any single unit up to 150lbs.)

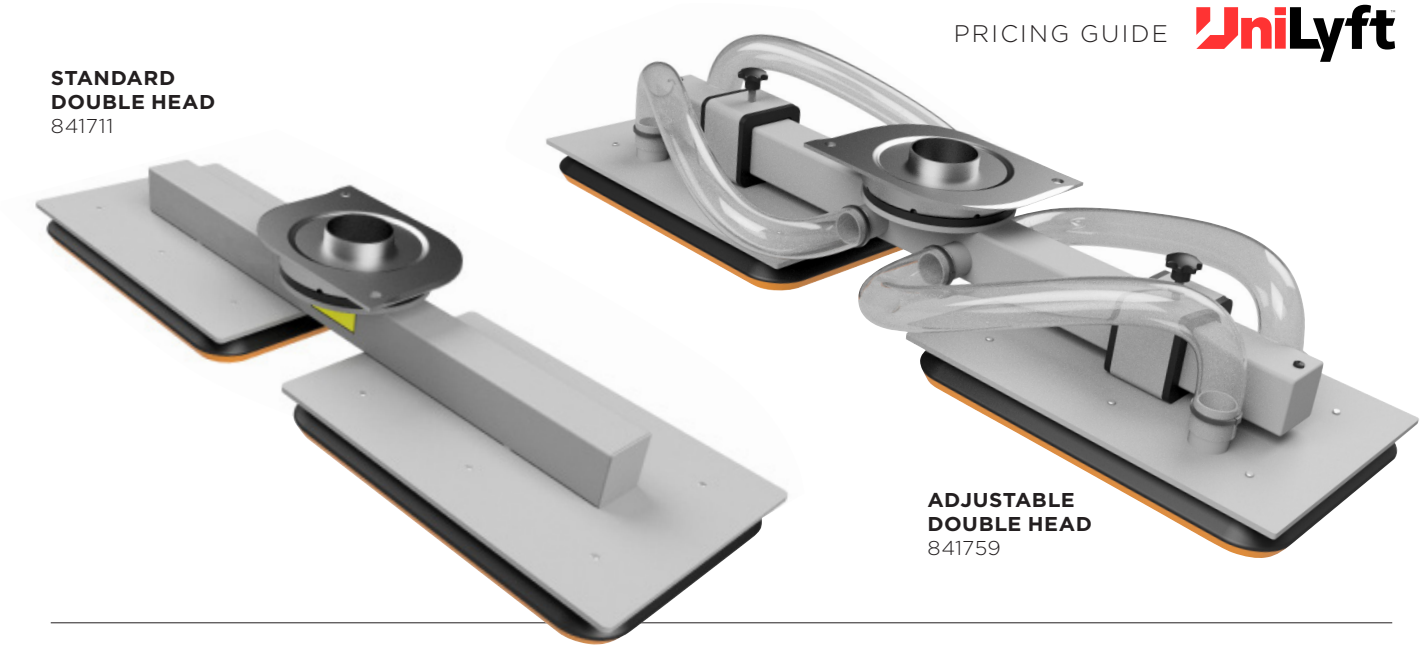

DOUBLE HEAD

PRODUCT SPECIFICATION

PRODUCT NAME	PART NUMBER	PRICE USD
Standard Double Head	841711	$799
Adjustable Double Head	841759	$899
Black Gasket & Sponge Assembled	860037	$119
Black Gasket (200mm x 290mm)	860037-01	$59
Orange Sponge (200mm x 290mm)	860037-02	$29

UNIT CAPABILITIES

CONFIG 1	8″ x 16″ 16″ x 16″ 8″ x 24″ 12″ x 21″ 12″ x 24″	8″ x 16″ 16″ x 16″ 8″ x 24″ 12″ x 21″ 12″ x 24″
CONFIG 2	24″ x 24″	
CONFIG 3	12″ x 48″ 16″ x 48″ 16″ x 72″ 24″ x 24″ 24″ x 36″	

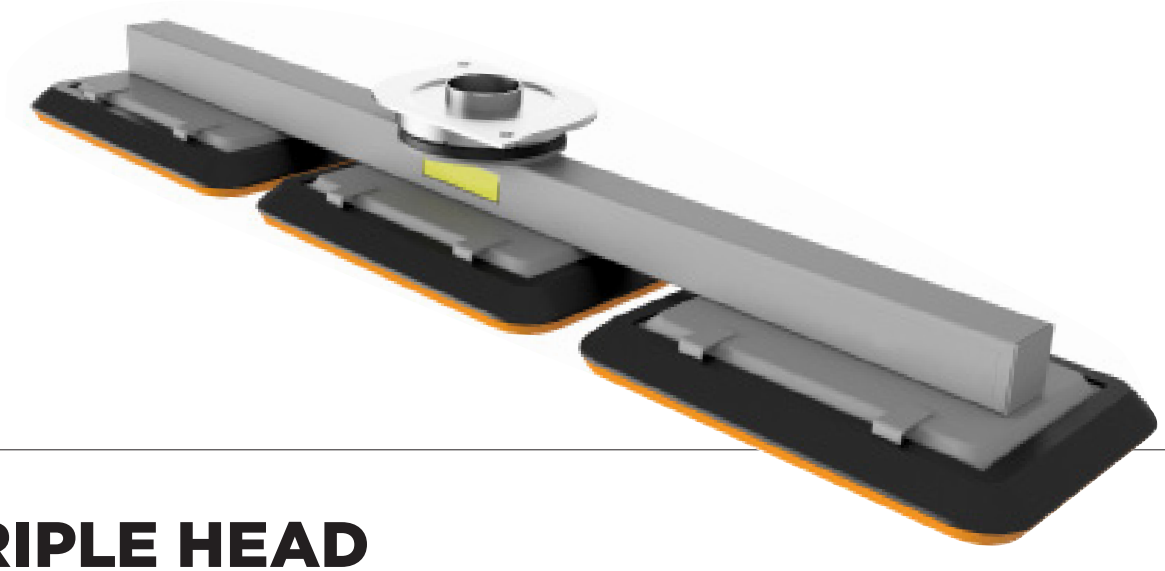

TRIPLE HEAD

PRODUCT SPECIFICATION		
PRODUCT NAME	PART NUMBER	PRICE USD
Complete Suction Head	841750-072	$899
Black Gasket & Sponge Assembled	860037	$119
Black Gasket (200mm x 290mm)	860037-01	$59
Orange Sponge (200mm x 290mm)	860037-02	$29

UNIT CAPABILITIES

8″ x 12″ 12″ x 12″	8″ x 12″ 12″ x 12″	8″ x 12″ 12″ x 12″

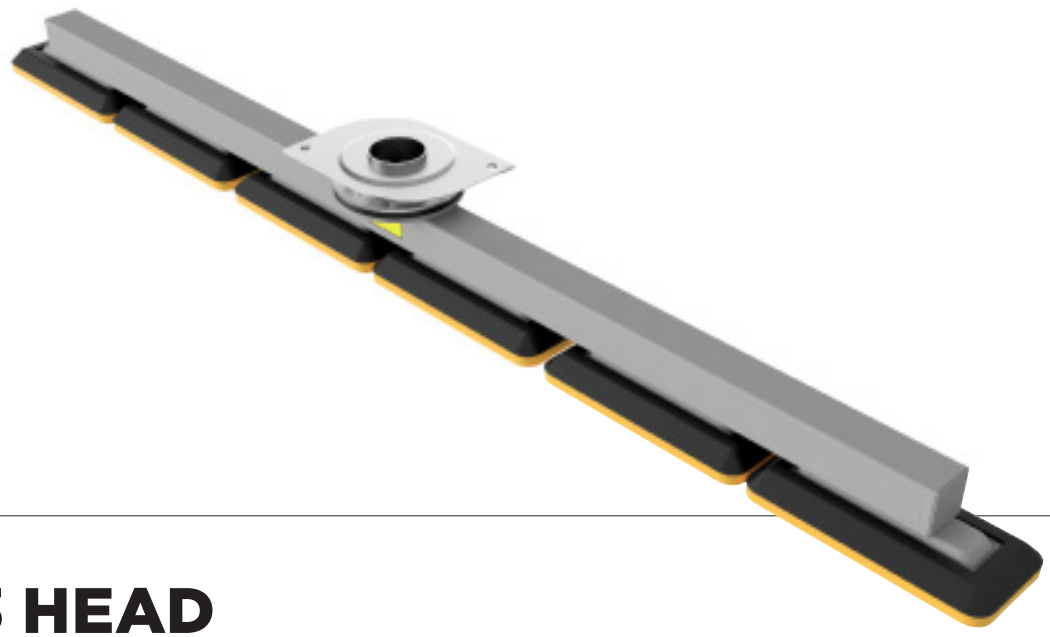

6/3 HEAD

PRODUCT SPECIFICATION		
PRODUCT NAME	PART NUMBER	PRICE USD
Complete Suction Head	841763	$999
Black Gasket & Sponge Assembled	860038	$99
Black Gasket (90mm x 200mm)	860038-01	$59
Orange Sponge (80mm x 200mm)	860038-02	$20

UNIT CAPABILITIES

CONFIG 1

4″ x 8″	4″ x 8″	4″ x 8″	4″ x 8″	4″ x 8″	4″ x 8″

CONFIG 2

4″ x 16″ 8″ X 16″	4″ x 16″ 8″ X 16″	4″ x 16″ 8″ X 16″

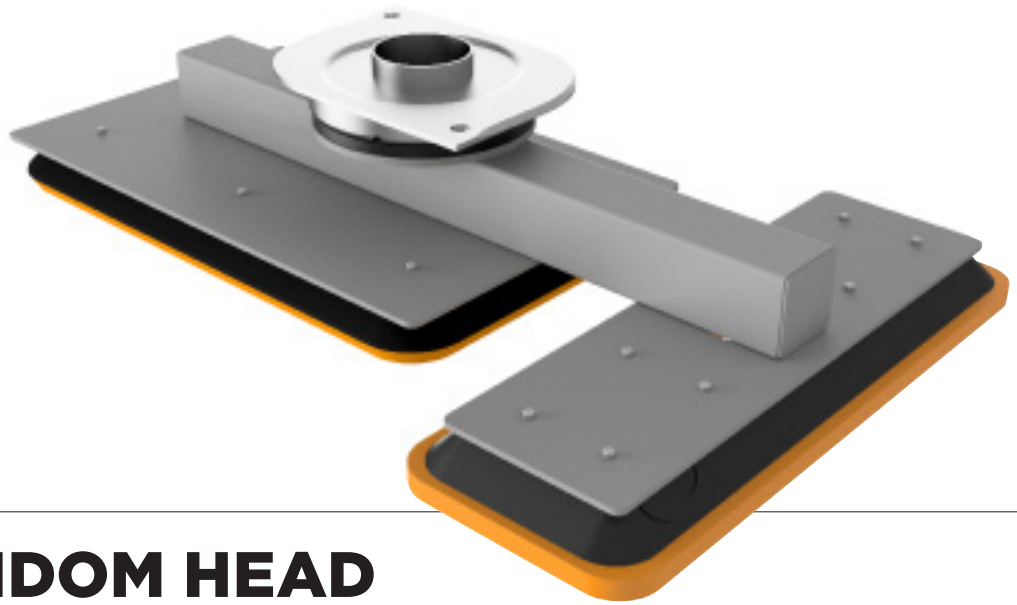

RANDOM HEAD

BEACON HILL PLATFORM

PRODUCT SPECIFICATION

PRODUCT NAME	PART NUMBER	PRICE USD
Complete Suction Head	841750-071	$999
Black Gasket & Sponge Assembled	860039	$119
Black Gasket (210mm x 330mm)	860039-01	$69
Orange Sponge (210mm x 330mm)	860039-02	$33
Black Gasket & Sponge Assembled	860048	$109
Black Gasket (120mm x 315mm)	860048-01	$59
Orange Sponge (120mm x 315mm)	860048-02	$29

UNIT CAPABILITIES

CONFIG 1

14″ x 14″

7″ x 14″

OR

21″ x 14″

CONFIG 2

XL USA - 21″ x 35″

XL CAN - 21″ x 28″

NOTE: *This head will work with all of our products with a Random Bundle configuration. Products such as: Beacon Hill, Series 3000, Umbriano, Bristol Valley and Windermere.*

THORNBURY HEAD

PRODUCT SPECIFICATION		
PRODUCT NAME	PART NUMBER	PRICE USD
Complete Suction Head	841750-075	$999
Black Gasket & Sponge Assembled	860037	$119
Black Gasket (200mm x 290mm)	860037-01	$59
Orange Sponge (200mm x 290mm)	860037-02	$29
Black Gasket & Sponge Assembled	860027	$99
Black Gasket (150mm x 210mm)	860027-01	$55
Orange Sponge (150mm x 210mm)	860027-02	$23

LAYING PATTERN

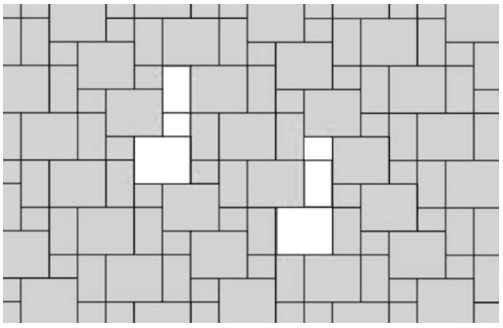

BUNDLE LAYOUT

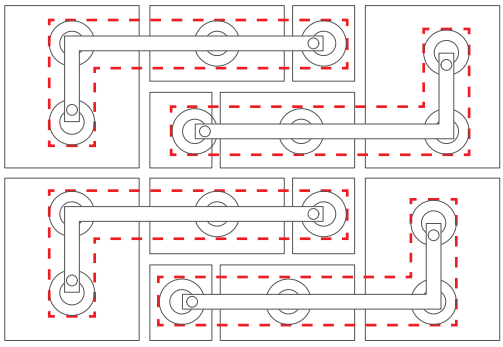

NOTE: *This head only works with this bundle configuration. Check with a Unilock Territory Manager to confirm.*

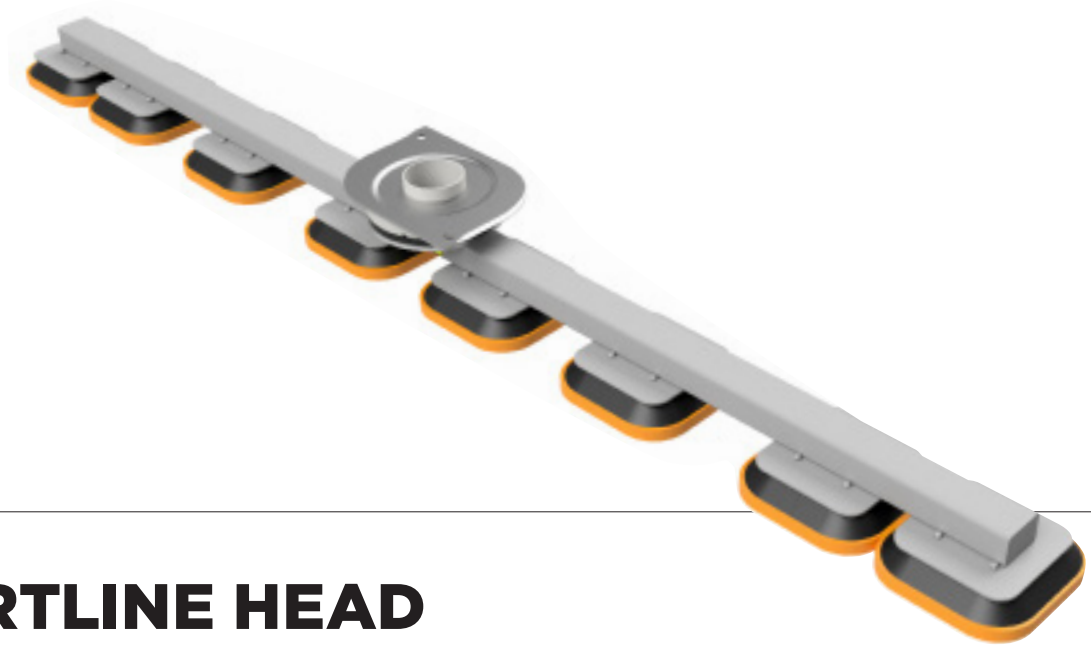

ARTLINE HEAD

PRODUCT SPECIFICATION		
PRODUCT NAME	PART NUMBER	PRICE USD
Complete Suction Head	841761	$1,499
Black Gasket & Sponge Assembled	860070	$22
Black Gasket (85mm x 85mm)	860070-01	$12
Orange Sponge (85mm x 85mm)	860070-02	$5.20

REVERSIBLE PICK-UP PATTERN

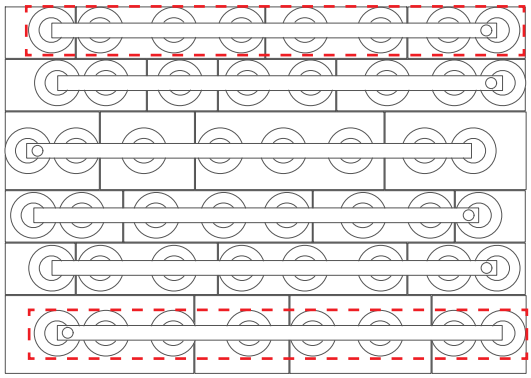

NOTE: *Head is flipped 180 degrees for each cluster to accommodate the variable joint spacing.*

CITY PARK/HEX HEAD

PRODUCT SPECIFICATION		
PRODUCT NAME	PART NUMBER	PRICE USD
Complete Suction Head	841750-074	$1,089
Black Gasket & Sponge Assembled	860050	$239
Black Gasket	860050-01	$199
Orange Sponge	860050-02	$29

PICK-UP PATTERN

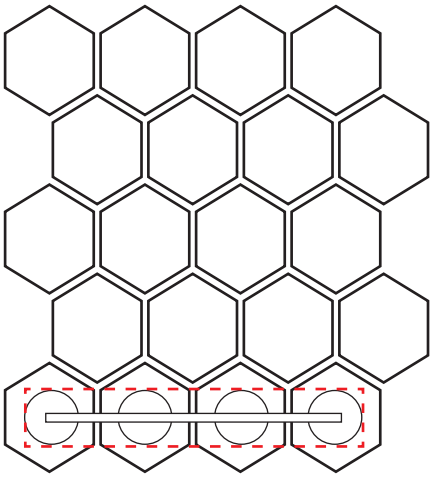

NOTE: *Head picks up 4 in a row, which is ideal for 10 cm thick pavers. A custom double head can be ordered for 6 cm product. (picks up 8 stones at a time)*

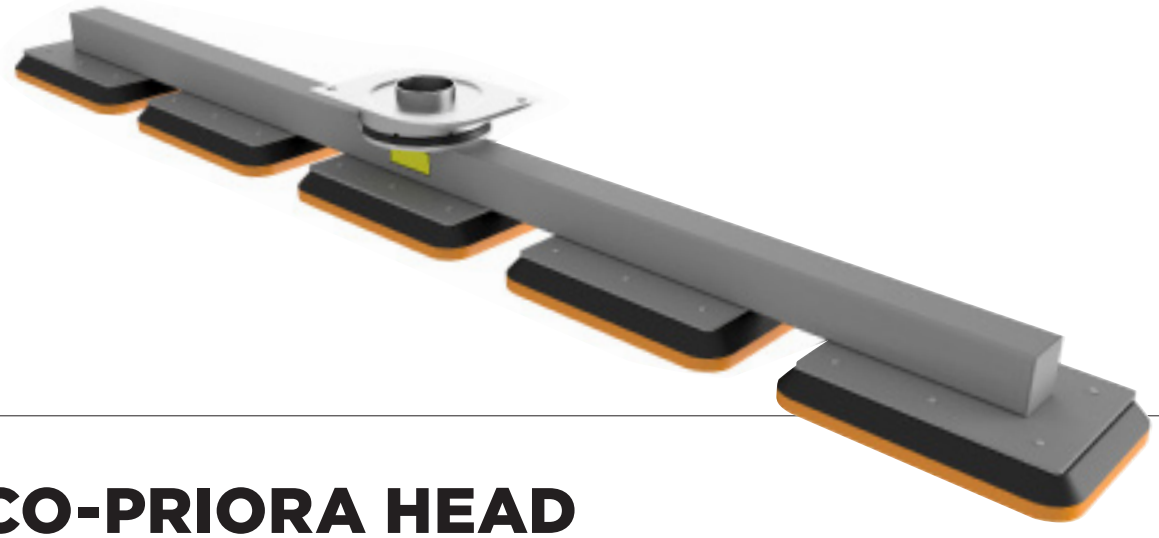

ECO-PRIORA HEAD

PRODUCT SPECIFICATION		
PRODUCT NAME	PART NUMBER	PRICE USD
Complete Suction Head	841764	$999
Black Gasket & Sponge Assembled	860027	$99
Black Gasket	860027-01	$55
Orange Sponge	860027-02	$23

UNIT CAPABILITIES				
10″ x 10″	10″ x 10″	10″ x 10″	10″ x 10″	10″ x 10″

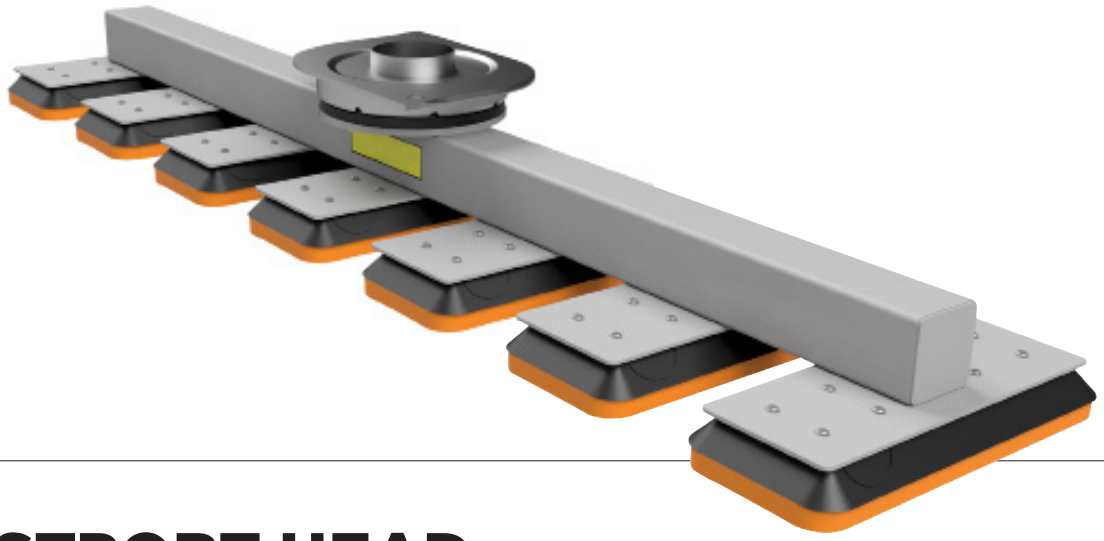

WESTPORT HEAD

PRODUCT SPECIFICATION		
PRODUCT NAME	PART NUMBER	PRICE USD
Complete Suction Head	841750-081	$999
Black Gasket & Sponge Assembled	860038	$99
Black Gasket	860038-01	$59
Orange Sponge	860038-02	$20

UNIT CAPABILITIES

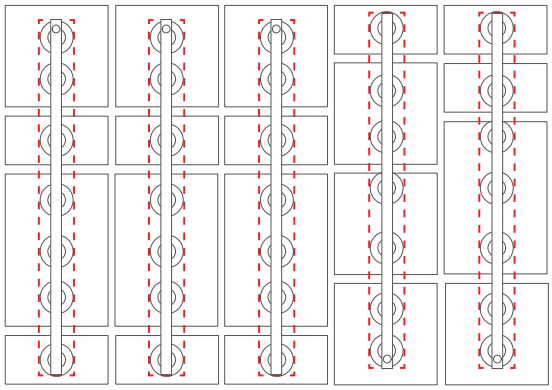

NOTE: *We recommend that the clusters are installed in a random running bond herringbone pattern or cluster.*

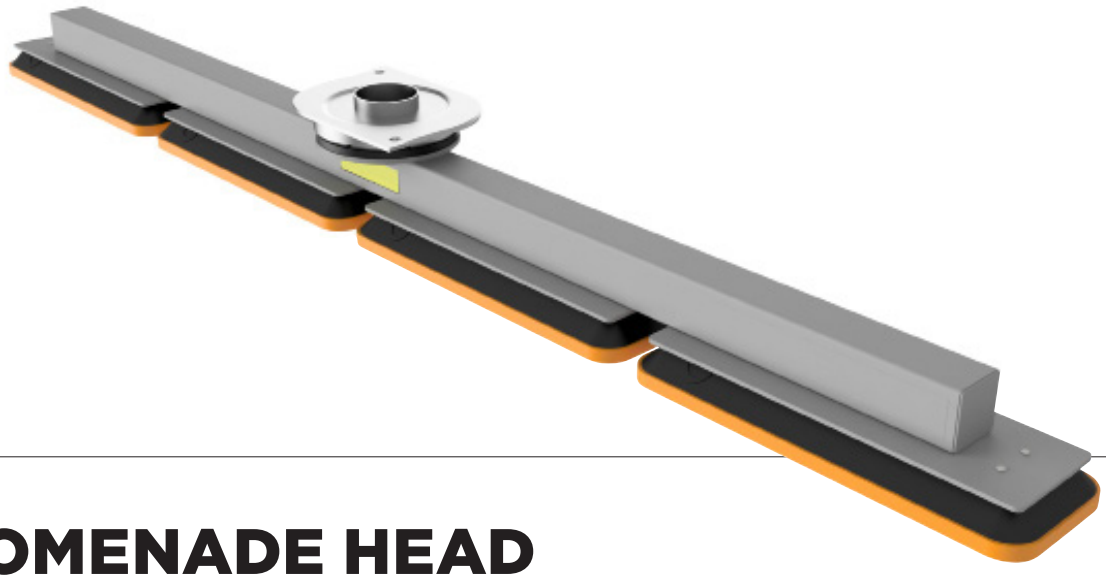

PROMENADE HEAD

PRODUCT SPECIFICATION		
PRODUCT NAME	PART NUMBER	PRICE USD
Suction Head	841750-079	$1,299
Black Gasket & Sponge Assembled	860086	$119
Black Gasket	860086-01	$89
Orange Sponge	860086-02	$29

UNIT CAPABILITIES

CONFIG 1

4″ x 12″	4″ x 12″	4″ x 12″	4″ x 12″

CONFIG 2

8″ x 24″	8″ x 24″

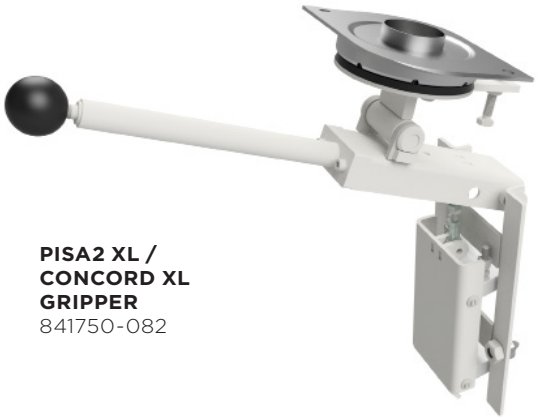

PISA2 XL / CONCORD XL GRIPPER
841750-082

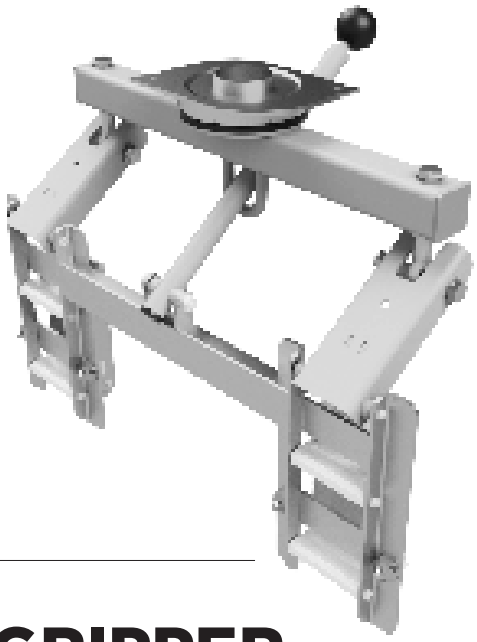

PISA2 XL / CONCORD XL DOUBLE GRIPPER
841750-086

PISA2 XL / CONCORD XL GRIPPER

PRODUCT SPECIFICATION		
PRODUCT NAME	PART NUMBER	PRICE USD
PISA2 XL / CONCORD XL GRIPPER	841750-082	$ 979
PISA2 XL / CONCORD XL DOUBLE GRIPPER	841750-086	$1,549

NOTE: *Please contact us for pricing information.*

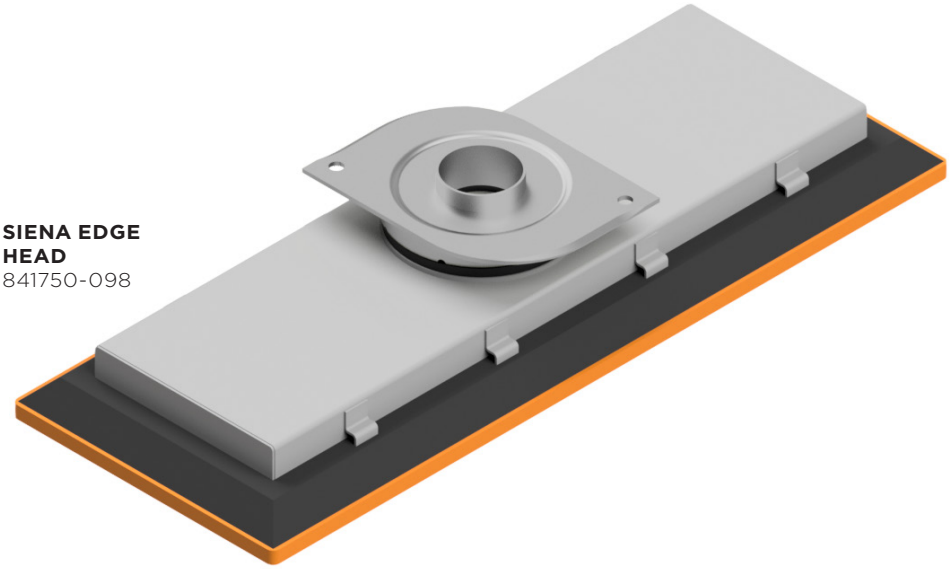

SIENA EDGE HEAD
841750-098

SIENA EDGE HEAD

PRODUCT SPECIFICATION		
PRODUCT NAME	PART NUMBER	PRICE USD
COMPLETE SUCTION HEAD	841750-098	$ 699
BLACK GASKET & SPONGE ASSEMBLED	CALL	CALL
BLACK GASKET (200mm x 290mm)	CALL	CALL
ORANGE SPONGE (200mm x 290mm)	CALL	CALL

NOTE: *Please contact us for pricing information.*

Parts PRICING

- All prices on parts are in USD and are FOB Wappingers Falls, NY (unless ordered with a UniLyft)
- Delivery: Approximately 1 week. Call to confirm.
- Unilock reserves the right to change pricing and/or specifications without notice.

EXTENSION TUBES

PART NUMBER	DESCRIPTION	PRICE USD
841429-200	Extension with quick disconnect (200 mm)	$219
841429-460	Extension with quick disconnect (460 mm)	$249

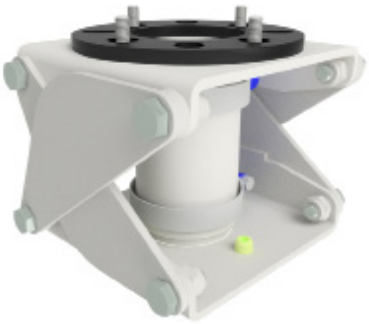

90° ANGLE ADAPTER

PART NUMBER	DESCRIPTION	PRICE USD
641009	90° Angle Adapter (for vertically stacked slabs)	$499

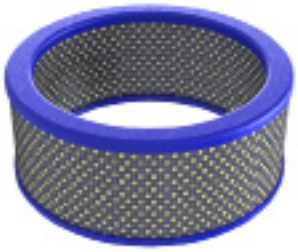

VACUUM PRE FILTERS

PART NUMBER	DESCRIPTION	PRICE USD
841619	Filter Vaculyft PM, SM1500, P	$59
841833	Filter Vaculyft L, E	$34
AG17210ZE3505	Air Filter Honda GX390	$49
HI04130500	Hydraulic Filter	$89

LIFTING TUBE

COMPLETE ASSEMBLY WITH RAISE & LOWER CONTROLLER

PART NUMBER	DESCRIPTION	PRICE USD
640714	Prilift 140 Tubelifter	$1,699
640716	Prilift 160 Tubelifter	$1,799
640718	Prilift 180 Tubelifter	$1,849
640720	Prilift 200 Tubelifter	$1,949
640723	Prilift 230 Tubelifter	$2,149
640725	Prilift 250 Tubelifter	$2,199
640730	Prilift 300 Tubelifter	$2,599
841447	Hanging point Vaculyft	$149

LIFTING TUBE

COMPLETE ASSEMBLY (WITHOUT CONTROLLER)

PART NUMBER	DESCRIPTION	PRICE USD
640465	Lifting tube unit Ø140 std	$1,449
640475	Lifting tube unit Ø160 std	$1,499
640485	Lifting tube unit Ø180 std	$1,629
640495	Lifting tube unit Ø200 std	$1,699
640498	Lifting tube unit Ø230 std	$1,789
640505	Lifting tube unit Ø250 std	$1,899

LIFTING TUBE TUBE ONLY

PART NUMBER	DESCRIPTION	PRICE USD
640460	Lifting tube Ø140 std	$399
640470	Lifting tube Ø160 std	$489
640480	Lifting tube Ø180 std	$569
640490	Lifting tube Ø200 std	$829
640497	Lifting tube Ø230 std	$899
640500	Lifting tube Ø250 std	$899
640510	Lifting tube Ø300 std	$999

VACUUM HOSE 2" GREY

PART NUMBER	DESCRIPTION	PRICE USD
841063-1150	Vacuum hose 2" for Vaculyft L & E In	$29
841063-1350	Vacuum hose 2" for Vaculyft PM In	$39
841063-1700	Vacuum hose 2" for Vaculyft PM, L & E Out	$44
841063-1900	Vacuum hose 2" for Vaculyft P In & Out	$49

MISCELLANEOUS PARTS

PART NUMBER	DESCRIPTION	PRICE USD
640000	Suction raise and lower Controller Unit	$1,499
641001	Quick disconnection, Lower	$169
841318	Quick disconnection upper w.s	$179
641007	Seal Quick disconnection	$15
641008	O-ring quick connection	$5
841429-200	Extension with quick disconnect 200	$219
841429-460	Extension with quick disconnect 460	$249
640050	Adjustment without load, kit	$39
841191	Adhesive anti-skid	$59
841180-02	Poly-V Belt PJ 457-8	$39
841480-05	Poly-V Belt PJ483 -8 Ribs	$39
XB4BS8444	Emergency Stop	$99
841316	Lower part of plumb bob	$19
841317	Upper Part of Plumb	$59
841477	Manual Rack	$69
841185	Plastic cover steering console	$399
841131	Plastic side cover Vaculyft L	$279
841116-50	Spring for operator platform	$69
HI1670390002	Throttle potentiometer	$89
841336	Transport hook for vacuumlifter	$41
841447	Hanging point Vaculyft	$129
840503	Hose clamp 44-56mm	$5
841421-02	Winch belt	$49
700PS618	Textile tape black	$29
DJW12-33	Battery 12V 33AH	$119
841473-01	Hydraulic motor 8cc	$359
841756-001	Vacuumeter test unit	$45

CUSTOM HEADS READILY AVAILABLE **FOR LIFTING ALMOST ANYTHING!**

- ✓ Small or Large
- ✓ Smooth or Rough
- ✓ Textured Designs
- ✓ Exposed Aggregate
- ✓ Patterned
- ✓ Natural Stone

CONTACT US
FOR MORE INFORMATION

Exclusive UniLyft Distributor

UNILOCK®

UNILOCK.COM | 1-800-UNILOCK